Constant depth error-corrected random circuit for quantum advantage

Louis Paletta, Mazyar Mirrahimi, Christophe Vuillot, Anthony Leverrier, Alain Sarlette

Equipes QUANTIC, COSMIQ & MOCQUA

30th November 2022

About Quantum Advantage

A blurry definition ...

Practical VS **Asymptotic** advantage

- Practical $\leftrightarrow$ Shorter running time, claimed by [Google, 2019]
- Asymptotic $\leftrightarrow$ Polynomial VS Non-polynomial, **yet to be proven**

Quantum advantage in the asymptotic regime ?

- upper bound on the power of classical computation ?
- In the presence of noise ?

Aim of our research = **circuit for simple as possible asymptotic quantum advantage !**

Random Circuit Sampling

Sampling from the distribution $p_x = \left|\langle x| C |0\rangle^{\otimes n}\right|^2$ associated to the output of a randomly generated circuit C

Complexity results:

- **Classicaly hard** to simulate the ideal circuit
- **Classicaly easy** to approximate the noisy circuit (cf below)

asymptotic $\neq$ Practical advantage [Google, 2019]

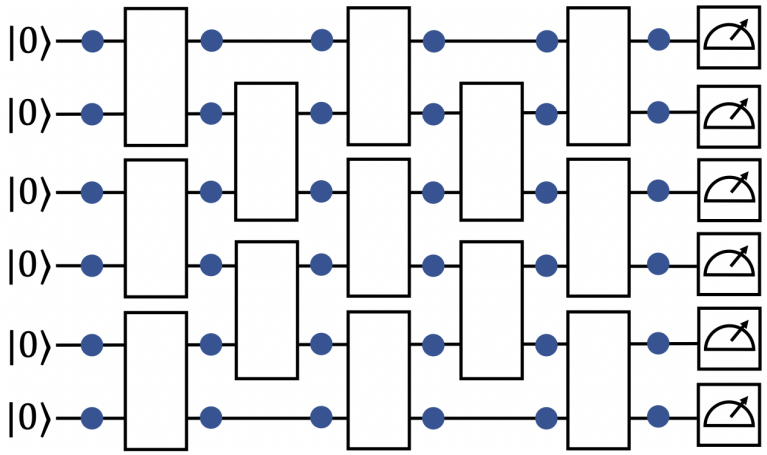

Figure: Noisy RCS [Vazirani, 2022]

Theorem (reformulated)

There exist a polynomial-time classical algorithm that approximates sampling from noisy randomly generated circuit [Vazirani, 2022]

The cat-qubit paradigm

Information encoded in the **coherent states** of an harmonic oscillator

$$|0\rangle := |\alpha\rangle \quad |1\rangle := |-\alpha\rangle$$

- Exponential suppression of bit-flip with $\overline{n} = |\alpha|^2$
- Linear increase of phase-flip

Effective phase-flip noise channel:

$$\Lambda_Z(\rho) = (1-\varepsilon)\rho + Z\rho Z$$

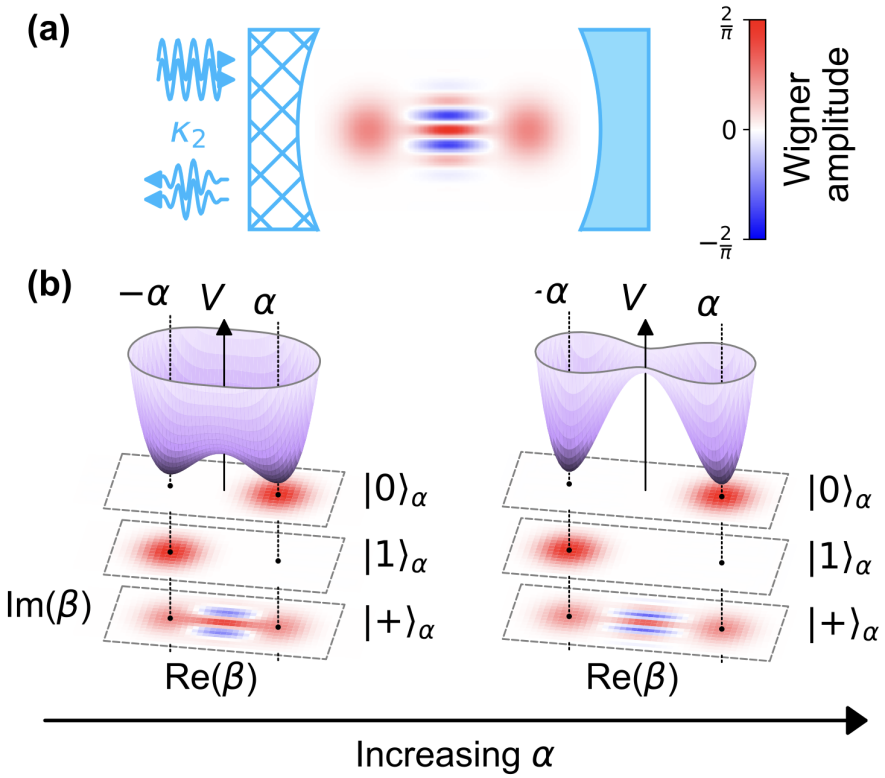

Figure: Quantum information is encoded in a resonator [Lescanne et al., 2020]

Instantaneous Quantum Polynomial-time (IQP) circuits

Definition

IQP circuit are a family of random circuit made of diagonal gates in the X basis (commuting gates) surrounded by Hadamard gates

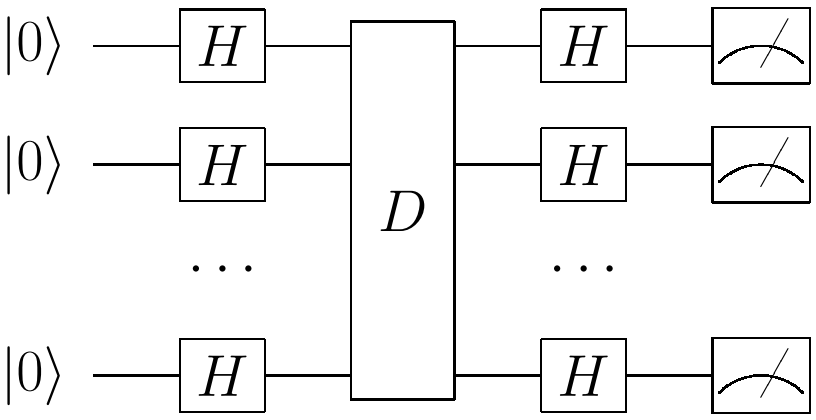

Figure: IQP circuit

- **Classically hard** with gates sets {T,CS} or {CS,CCZ}
- **Easy** to approximate in the presence of noise
- Hadamard gate can be replaced by dual basis preparation/measurement

Intermediate regime with **quantum advantage without universality** !

Remark

IQP circuits are bias-preserving and can be implemented on cat-qubits

Quantum advantage on IQP circuits

Theorem (reformulated)

A constant fraction of sparse IQP circuits is hard to simulate up to some constant precision in ℓ_1 distance [Bremner et al., 2017]

Asymptotic results require to remain **below some precision threshold**

Problem 1: Logical depth increase

$$\text{Logical depth increases in } \mathcal{O}(\ln n)$$

$$\text{logical error } \varepsilon + \text{realistic noise model} \rightarrow \varepsilon_f \text{ increases in } \mathcal{O}(\ln n \times \varepsilon)$$

$\rightarrow$**Exceed any precision threshold without intermediate error correction !**

Non-Transversal gates

Classical encoding to protect against phase-flip ? [Bremner et al., 2017]

Problem 2: Non-Transversal gates

For a d-repetition code logical T/CS gate depth increases in $\mathcal{O}(d^2)$

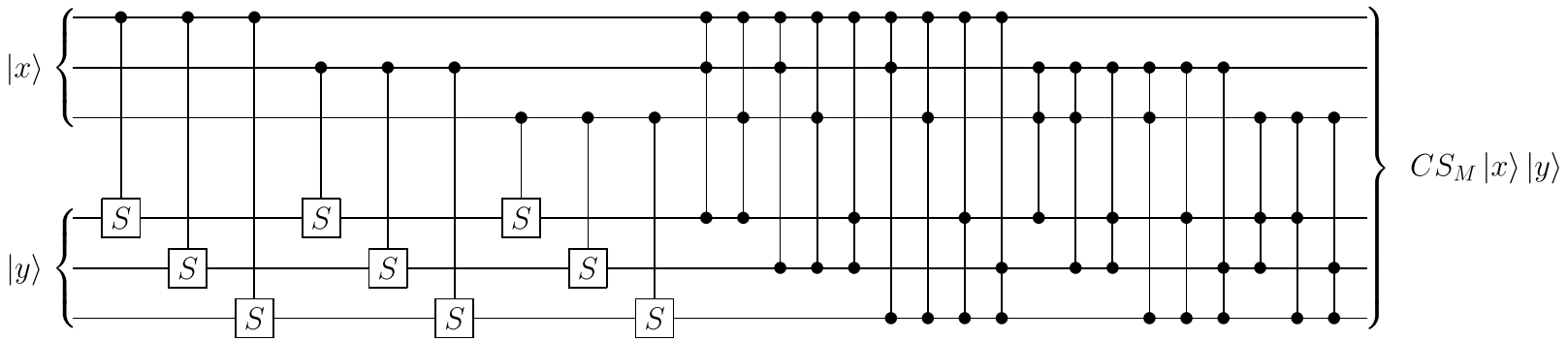

Figure: Logical CS gate in a repetition code

realistic noise model $\rightarrow \varepsilon_f$ increases in $\mathcal{O}(d^2 \times \varepsilon)$

$\rightarrow$**Exceed any code threshold without intermediate error correction !**

Idea for simultaneous logical operation

Logical circuit of depth 1 by running the circuit on GHZ states

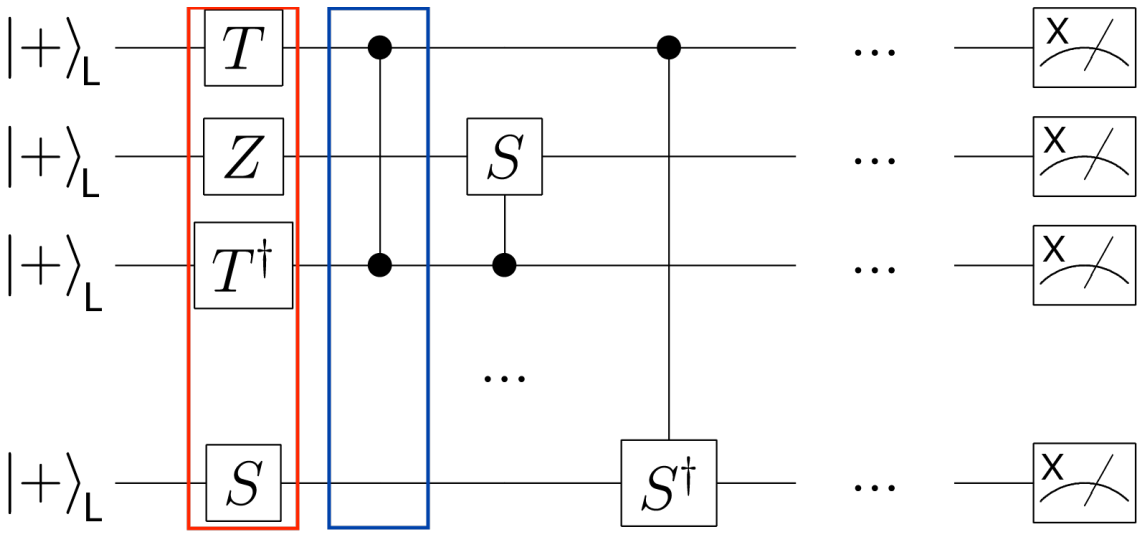

Figure: Example of logical IQP circuit

$$|+\rangle_L \rightarrow \frac{1}{2}[|00...0\rangle + |11...1\rangle]$$

Step i of the IQP circuit $\equiv$ the ith logical qubits $\rightarrow$ depth 1 physical circuit

3D Color Code (3DCC)

The set of gate of IQP circuit is not universal so we can hope to find a code that allows for the transversal implementation of logical T and CS gates

Definition

The 3D color code is a CSS topological code define on a 4-colex (specific lattice) with Z stabilizers associated to its faces and X stabilizers associated to its cells

Property

The 3D color code allows for the **transversal implementation** of logical T and logical CS

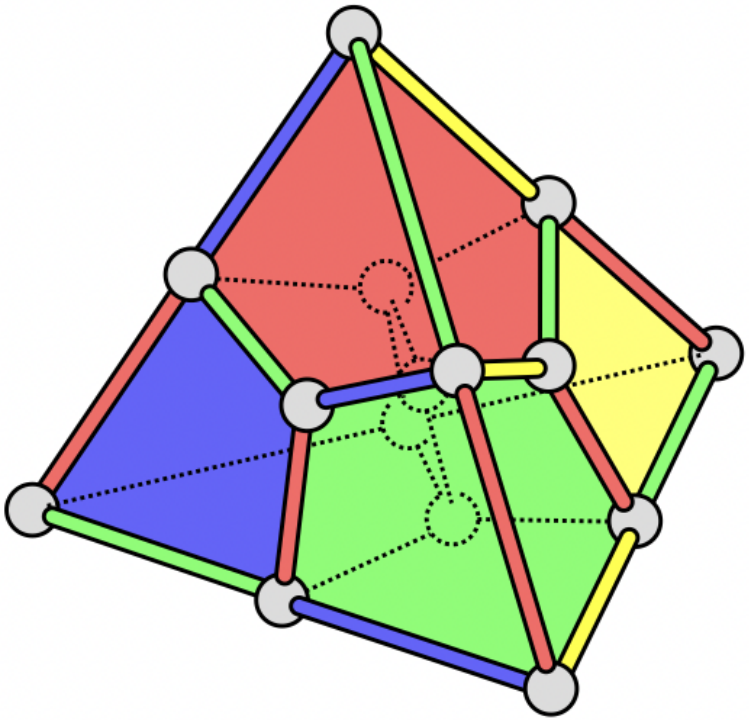

Figure: Example of 3D Color Code [Bombin and Martin-Delgado, 2007]

Combining the two : Chained Tetrahedron Code (CTC)

A quantum code that allows for logical gate to be applied on **disjoint sets of physical qubits** so that they can be performed **simultaneously** suffices

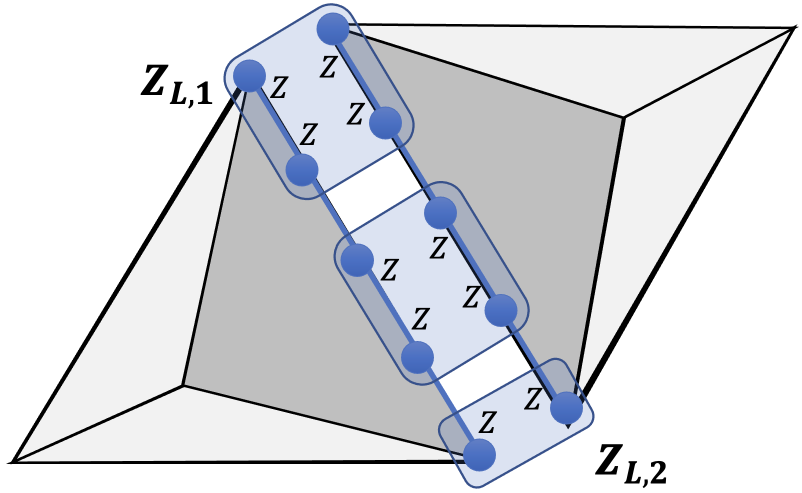

Figure: logical qubit entanglement through lattice surgery

- Logical qubit are entangled through local measurement
- Transversal application of T and CS gates on a single tetrahedral

Step i of the IQP circuit $\equiv$ i^{th} tetrahedral

$\rightarrow$ depth 1 physical circuit with error-correction

Remark

Starting in $|+...+\rangle$ and measuring Z stabilizers with perfect Z measurement and error correction gives constant depth preparation of $|+\rangle_L$

Conclusion

State preparation

Perfect Z measurements (cat-qubits) $\rightarrow$ **constant depth preparation**

Logical Depth

Parallel application on disjoint subsets $\rightarrow$ **constant logical depth**

Physical depth

3D Color Code $\rightarrow$ **constant physical depth**

Theorem

Under a certain phase-flip error rate, there exist a family of constant depth circuit that approximates any IQP circuit **up to any desired precision**

Taking into account bit-flip noise

Perfect measurement not essential ?

- Single-shot decoding gives a fault-tolerant preparation of 3DCC $|+\rangle_L$
- No propagation of X errors thanks to transversality

Work in progress

- Single-shot merging of tetrahedral code states for a fault-tolerant preparation of CTC $|+\rangle_L$?

Remark

Single-shot is a property of an error-correcting code and its decoder that allow fault-tolerant preparation without measurement repetition

3DCC = 3D Color Code, CTC = Chained Tetrahedron Code

Questions

Thank you for your attention !

Any questions ?

Bibliography

Bombin, H. and Martin-Delgado, M.-A. (2007).
Topological computation without braiding.
Physical review letters, 98(16):160502.

Bremner, M. J., Montanaro, A., and Shepherd, D. J. (2017).
Achieving quantum supremacy with sparse and noisy commuting quantum computations.
Quantum, 1:8.

Lescanne, R., Villiers, M., Peronnin, T., Sarlette, A., Delbecq, M., Huard, B., Kontos, T., Mirrahimi, M., and Leghtas, Z. (2020).
Exponential suppression of bit-flips in a qubit encoded in an oscillator.
Nature Physics, 16(5):509–513.

Annex (1) - Chained Tetrahedron Code

Addition of new Z-stabilizers + Merge of X-stabilizers on the edge

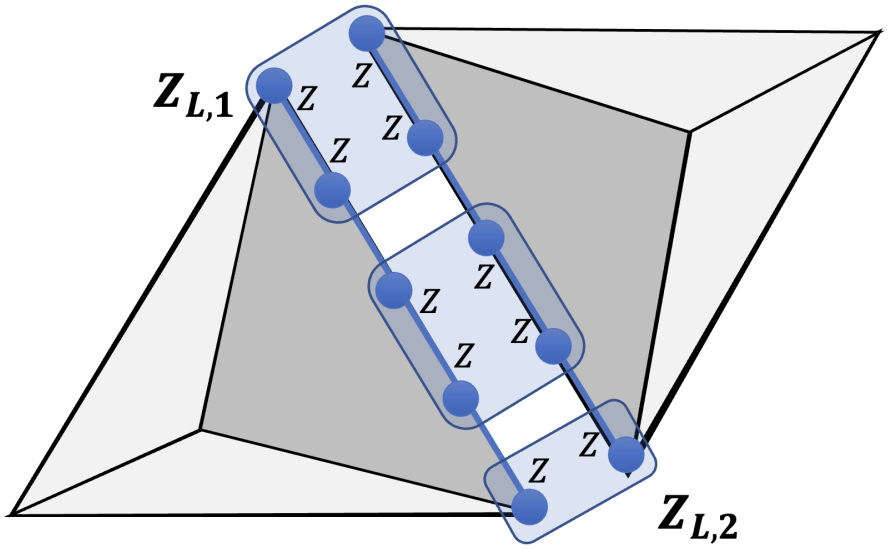

Figure: Z-stabilizers measurements

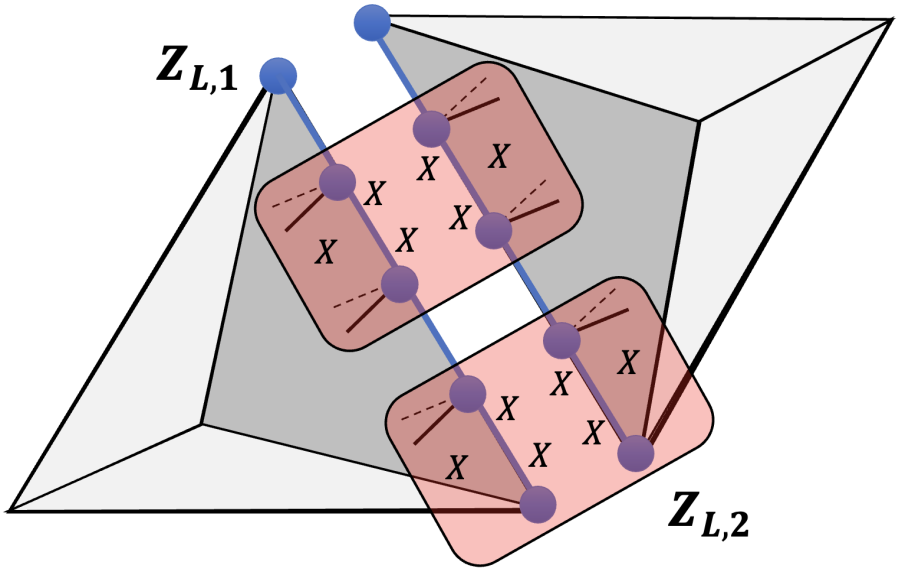

Figure: X-stabilizers merge

T and CS still transversal on a single tetrahedral because of X-stabilizers unchanged when restricted to a single tetrahedral

Annex (2) - Parallel Operation

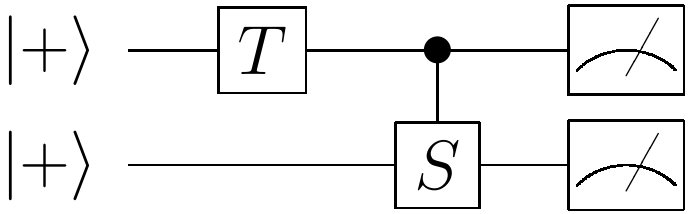

Figure: Logical depth-2 circuit

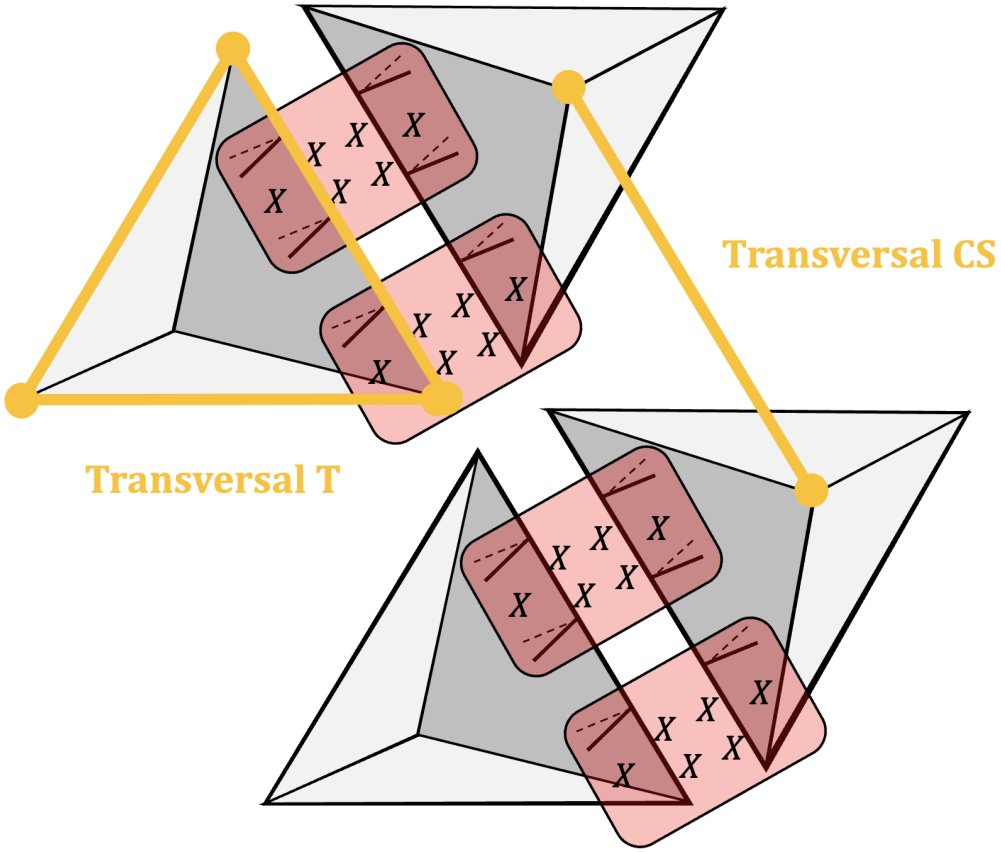

Figure: Equivalent depth-1 circuit